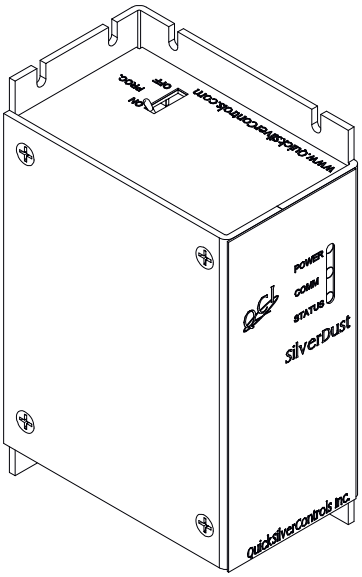
POWER
COMM
STATUS
silverDust
QuickSilverControls Inc.
www.QuickSilverControls.com
ON
PROC.
OFF

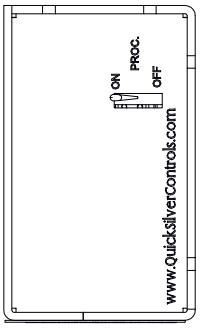
ON
PROC.
OFF
www.QuickSilverControls.com

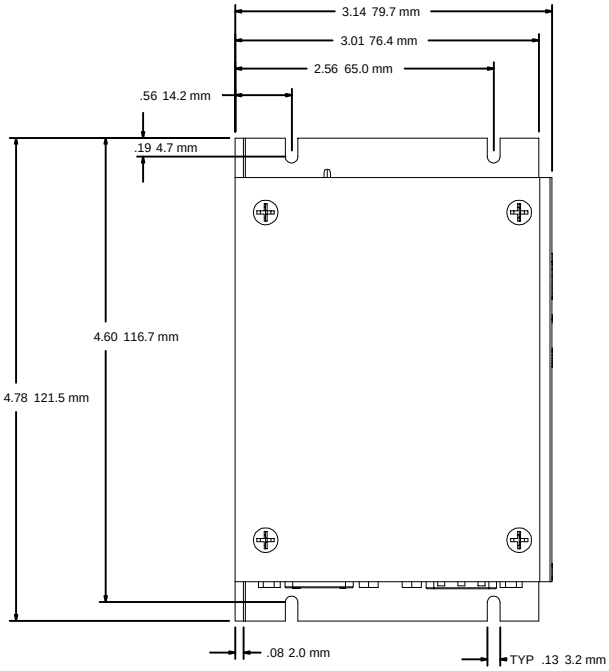
3.14 79.7 mm
3.01 76.4 mm
2.56 65.0 mm
.56 14.2 mm
.19 4.7 mm
4.60 116.7 mm
4.78 121.5 mm
.08 2.0 mm
TYP .13 3.2 mm

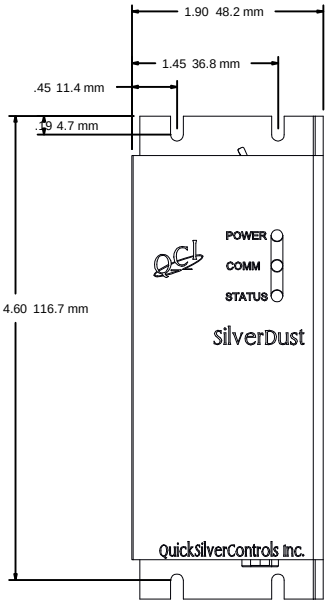
1.90 48.2 mm
1.45 36.8 mm
.45 11.4 mm
.19 4.7 mm
4.60 116.7 mm
POWER
COMM
STATUS
SilverDust
QuickSilverControls Inc.

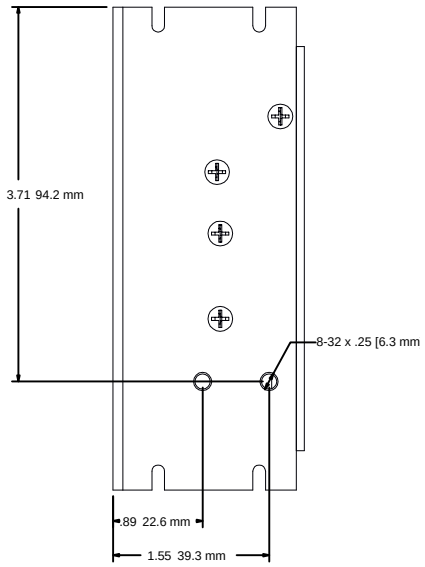
3.71 94.2 mm
8-32 x .25 [6.3 mm
.89 22.6 mm
1.55 39.3 mm

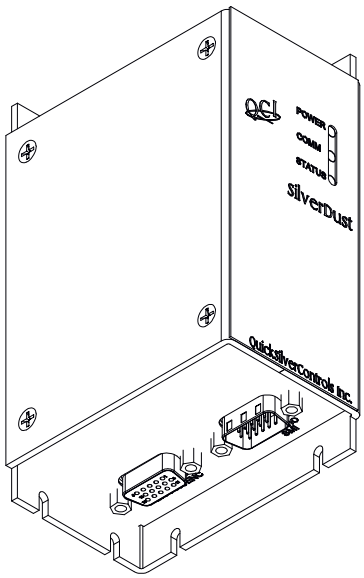
POWER
COMM
STATUS
silverDust
QuickSilverControls Inc.

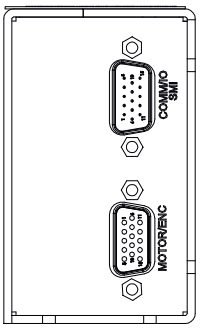
COMM/I/O
SMI
MOTOR/ENC