SilverMax X-Series Breakout QCI-BO-X1

The QCI-BO-X1 is a simple breakout module for SilverMax X-Series integrated servo motors. The breakout module provides a conveniently way of connecting power and access to communication, and I/O lines from the SilverMax X-Series M16 19-pin connector. The breakout is intended to be mounted through the wall of the control cabinet to allow easy wiring inside the cabinet while also providing a sealed transition through the wall of the cabinet.

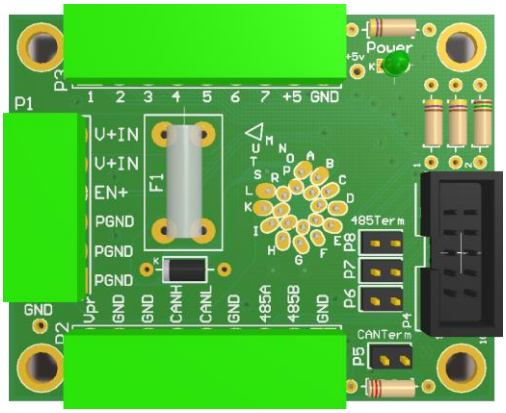

Top View

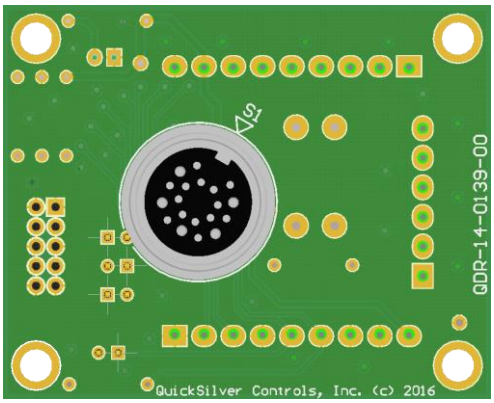

Bottom View

The input power is protected with an 8A fuse (F1):

- Manufacturer: Littlefuse
- Manufacturer Part Number: 0225008.HXUP

The QCI-BO-X1 Breakout Board comes with the following items:

1. Qty. 3 – Pluggable connectors
    a. Qty. 1 - 6-pin (for P1)
    b. Qty. 2 - 9 pin (for P2 and P3)
2. Qty. 1 – Fuse (for F1)
3. Qty. 4 – 2-pin jumpers (for P5, P6, P7, and P8)

The items listed above are available as a separate connector kit. Part number: QCI-CK-BX1.

Power LED lights up only when the breakout board is connected to a SilverMax X-Series motor and power is present on P1 terminal. Note: If power is present on P1 terminal and no SilverMax X-Series motor is connected, the power LED will not light up. The power LED should **not** be used to determine if power is present on the board.

The breakout board is designed to allow RS485 and CAN communications signals to be daisy-chained across multiple QCI-BO-X1 breakout boards via the P4 header using a standard 10-pin IDC flat ribbon cable. Contact QuickSilver Controls for 10-pin IDC flat ribbon cable options. The breakout board provides termination for RS-485 and CAN network via jumpers, P6, P7, P8, and P5, respectively. For the CAN bus, this termination is **not** optional.

® QuickControl® and QCI® are Registered Trademarks of QuickSilver Controls, Inc.
SilverLode™, SilverNugget™, SilverDust™, SilverSterling™, PVIA™, QuickSilver Controls™, and AntiHunt™ are trademarks of QuickSilver Controls, Inc..

Connector Descriptions

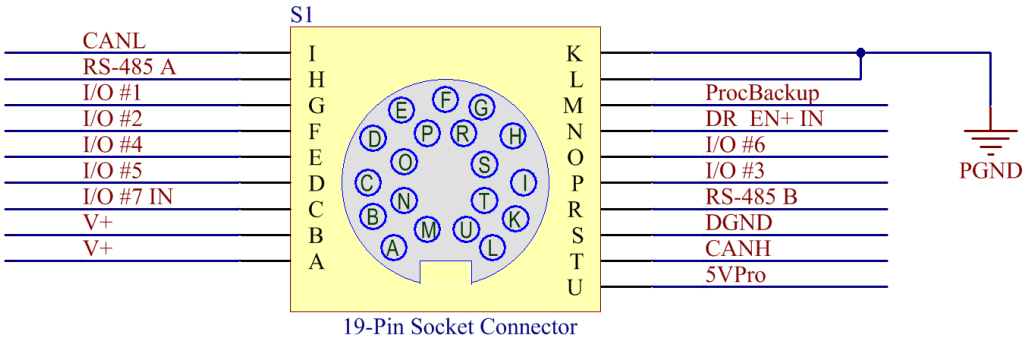

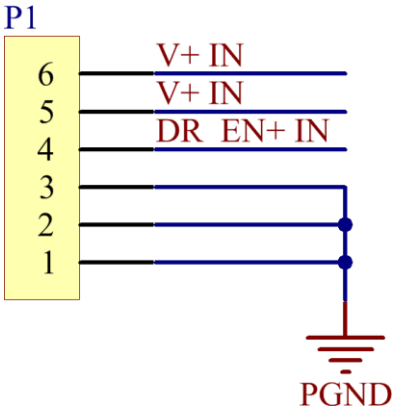

P1 – Input Power and Drive Enable

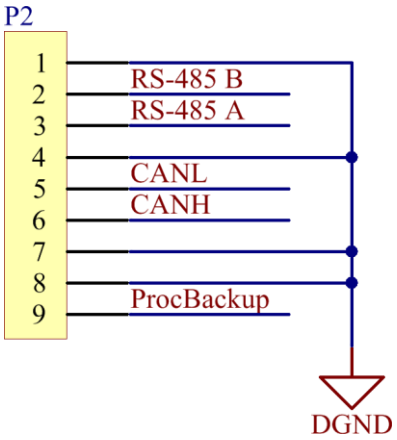

P2 – Communications Lines

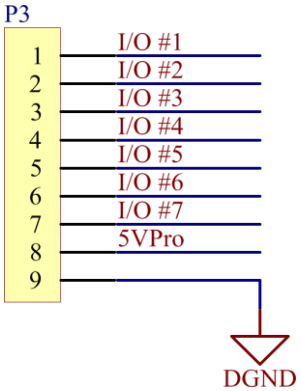

P3 – I/O Signals

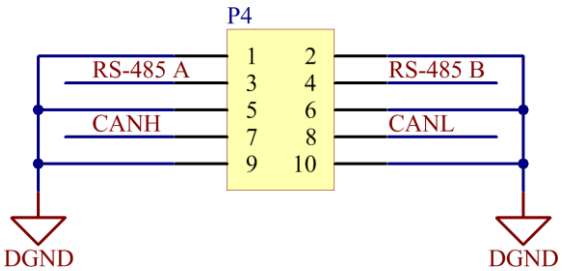

P4 – Communications via 10-Pin IDC

Typical System Setup

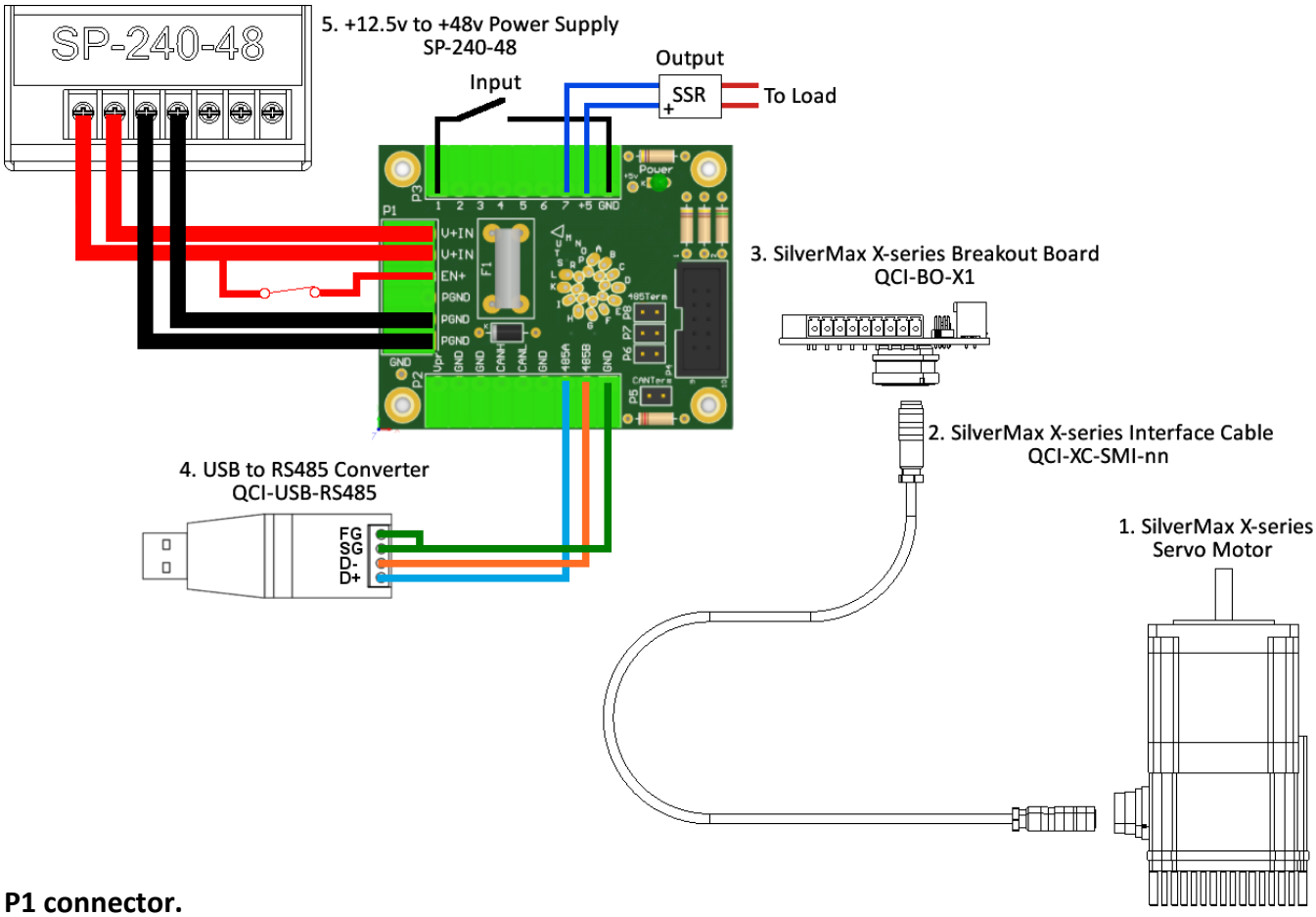

P1 connector.

1. Connect the positive supply voltage to V+IN terminals. If using smaller than 20 AWG wire, run separate wires from the positive supply to both V+IN terminals.
2. Connect the negative supply voltage to PGND terminal. If using smaller than 20 AWG wire run separate wires from the negative supply to at least two of the PGND terminals.
3. To take advantage of the drive enable feature, wire a switch from EN+ to V+IN. An open, disables the motor driver. If drive enable is not required, connect EN+ to V+IN.

P2 connector

1. For a single SilverMax motor on an RS-485 network, connect the 2-pin supplied jumpers to P6, P7, and P8 to provide 485 termination. Internal to the QCI-USB-RS485 converter are biasing resistors for the RS-485 network.
    a. For multiple SilverMax motors on an RS-485 network, only connect the three jumpers on the motor farthest from the serial host.
2. Wire QCI-USB-RS485 converter to breakout board
    a. Connect 485A to D+ on the USB-RS485 converter.
    b. Connect 485B to D- on the USB-RS485 converter.
    c. Connect GND to SG on the USB-RS485 converter.
3. To keep the processor running while main input power is shut off, connect +8 VDC to +12 VDC to the Vpr (ProcBackup pin) terminal. Note: this connection is not needed for normal operation.

Mechanical Dimensions

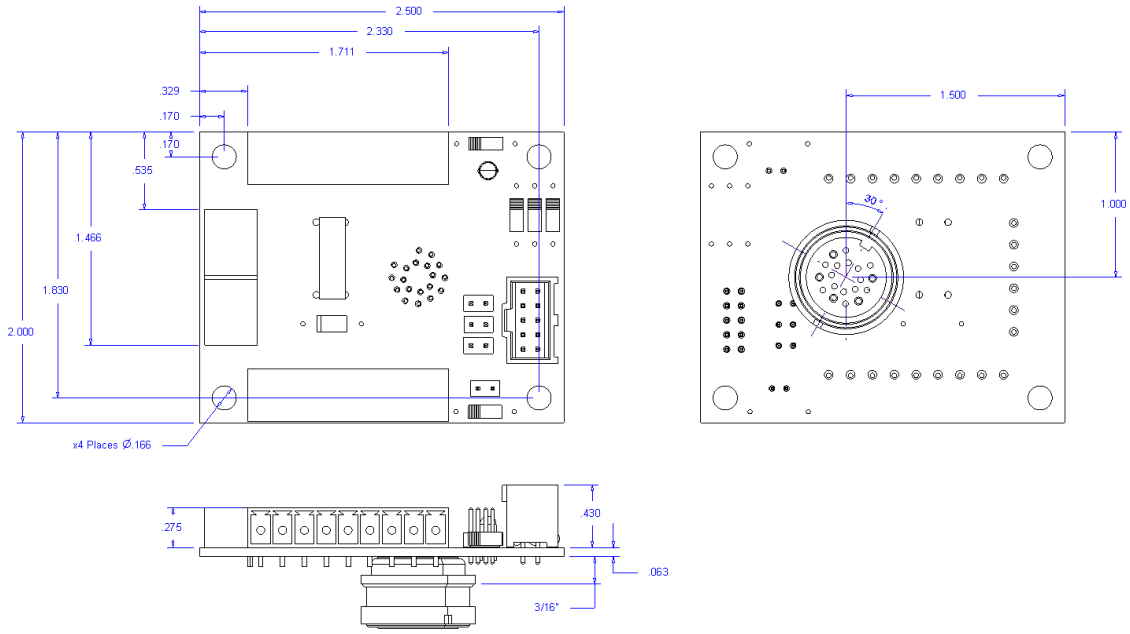

Panel Cutout Dimensions

The breakout board is designed to exit an enclosure (walls thicknesses 1mm MIN up to 3.5 mm MAX) with a single cutout for IP67 protection. The M16 19-pin connector includes a seal for IP67 protection.

Option 1 (Basic):
One .709" (18mm) hole with 4 holes for 3/16" tall standoff spacers to support board to panel. Must mount at least one standoff to prevent the breakout board from rotating when tightening 19-pin connector cable. User must seal spacer standoff holes to maintain IP67 rating. Standoffs holes on the breakout board allow for 6-32 and M3 size screws.

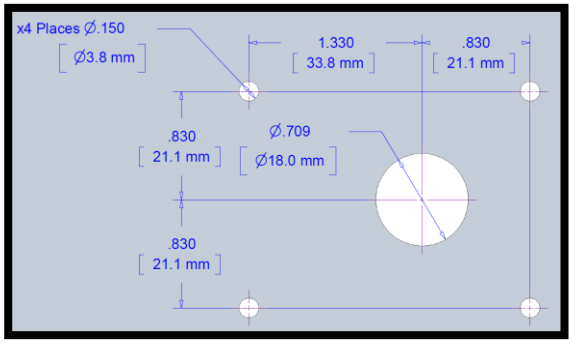

Option 1 (Basic) – Panel Cutout

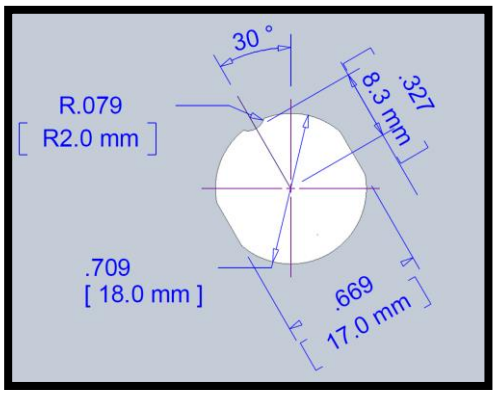

Option 2 (Full IP67 Protection) – Panel Cutout

Option 2 (Full IP67 Protection):
One .709" (18mm) hole with two .669" (17mm) flats to prevent the breakout board from rotating when tightening 19-pin connector cable. The R.079" (R2mm) notch is optional but ensures the M16 19-pin connector is aligned properly.

Mounting Instructions

In wash-down environments, the breakout board should be mounted either vertically or horizontally, with the cable exiting downward, as shown in the image below. This helps prevent liquids from pooling around the connector, which can seep inside the cabinet.