Optical I/O Module - OPTM and OPTO

QCI Part Numbers: QCI-OPTM-v, QCI-OPTMC-v, QCI-OPTO-v, QCI-OPTOC-c
(v = 5 VDC or 24 VDC I/O Voltage, C denotes 7.5 mm x 35 mm DIN carrier)

Caution: QCI-OPTM connections are different from QCI-OPTO. Please see diagram for connection details.

The new QCI-OPTM-v

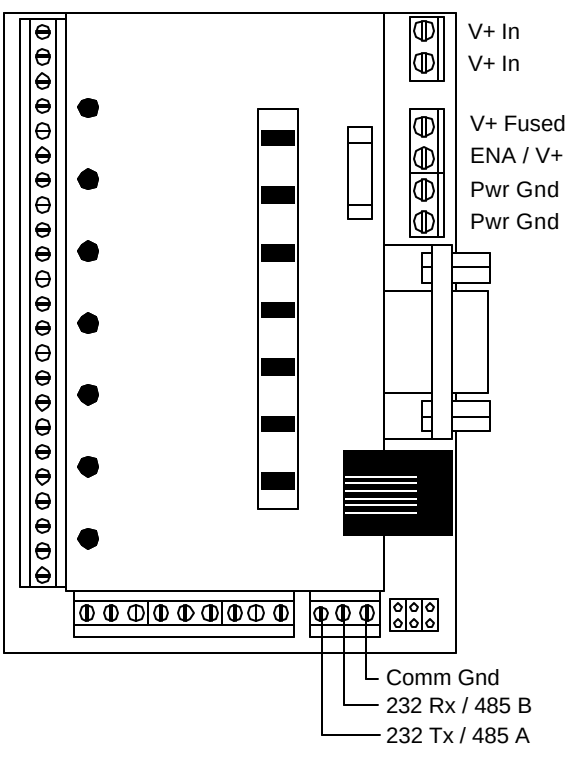

The QCI-OPTO-v

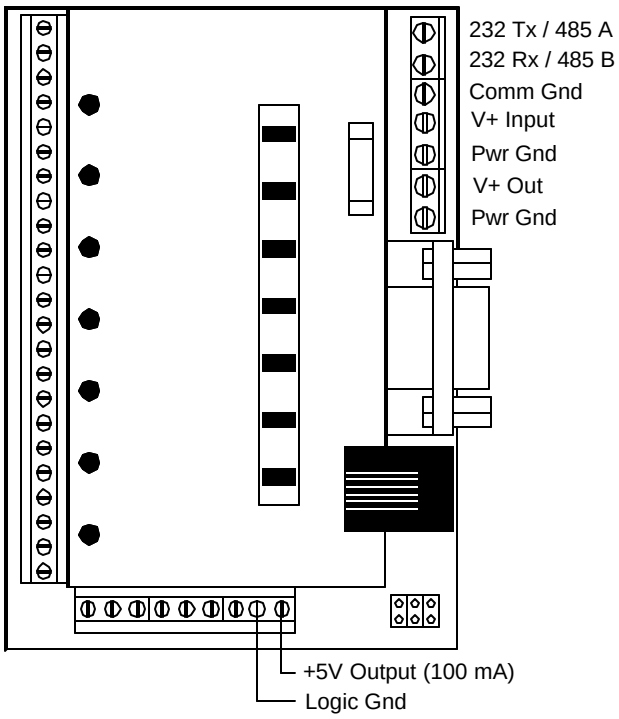

New Features on the OPTM

The OPTM module replaces the OPTO module. The module was updated to allow a separate connection to Pin 1 the SMI Port[1]. For some controllers, this pin is Power for others it is Driver Enable.

Product Overview

All optically isolated I/O lines have maximum frequency cutoffs. The 24 V model has an effective cutoff at 10kHz, while the 5 V model can pass up to 500kHz.

Inputs: All optically coupled inputs accept differential voltages (-V, +V). The 24 V model has an effective cutoff at 10kHz, while the 5 V model can pass up to 500kHz. If only the inputs of the module are used, the external power supply is **NOT** required, as the optical-couplers will

[1] SilverLode Multifunction Interface (SMI) Port - DB15HD Connector.

® QuickControl® and QCI® are Registered Trademarks of QuickSilver Controls, Inc.
SilverLode™, SilverNugget™, SilverDust™, PVIA™, QuickSilver Controls™, and AntiHunt™ are trademarks of QuickSilver Controls, Inc..

draw current from the input signal to power the input circuit, which will be isolated from the SilverLode device.

Outputs: The optically coupled outputs are single ended output lines driven by an N-channel MOSFET in an open-drain configuration (sinking output). Use of the outputs requires the module to be powered by an external DC source. The voltage supplied sets the voltage and power of the output signals.

Powering the Optical I/O Module

Most of the electronics and microchips of the OPTM I/O module's circuitry are powered by the +5 VDC, 100mA internal supply from the SilverLode controller/driver. A SilverLode device must be connected to the module and powered for the I/O module to operate.

Powering the +12 to +24 VDC Optically-Isolated Outputs

In order to use the optically coupled outputs, a regulated supply providing +12 to +24 VDC is required to be connected to pin 1 (+V) and pin 2 (Common) of terminal 1. The current rating of this supply will be determined by the amount of current needed to drive the output signals. Each output is capable of driving 1 A. The minimum current required to power all seven outputs under no load conditions is 150 mA. When all outputs are off, 55 mA is required to keep the output circuits active. This is required if optical isolation from the SilverLode device is desired on the outputs.

Configuring for the SilverNugget N3 Driver Enable Pin 1

The "ENA / V+" terminal on the OPTM allows complete control over the Driver Enable line. If +10 to 48 VDC is not supplied to " ENA / V+", the servo's drivers will be disabled. To power Driver Enable, Pin 1, place a jumper wire or control switch across terminals Fused and ENA / V+. When using an alternative supply, ensure that the supply's DC common ground is connected to the SilverLode DC common ground.

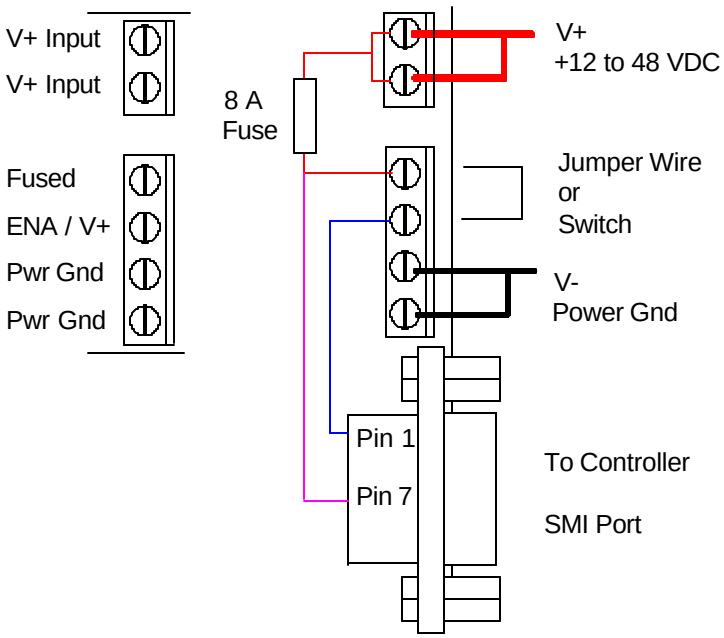

Simplified Schematic of OPTM

Note: See "How to Use" below for basic setup information with a SilverNugget N3 and SilverDust D2 (IGB).

Input Signals

The QCI-OPTM-24 device accepts input voltages ranging from 12-24 VDC. The QCI-OPTM-5 version accepts +5 VDC inputs as a factory default. The OPTM-5 can only accept 12-24 VDC input signal if an external resistor (2000 Ohm) is added in series to each input. Voltages greater than +5 VDC applied to a 5 volt input may cause device failure and voids the manufacturer's product warranty.

Connecting A Basic Contact Switch To Input #1

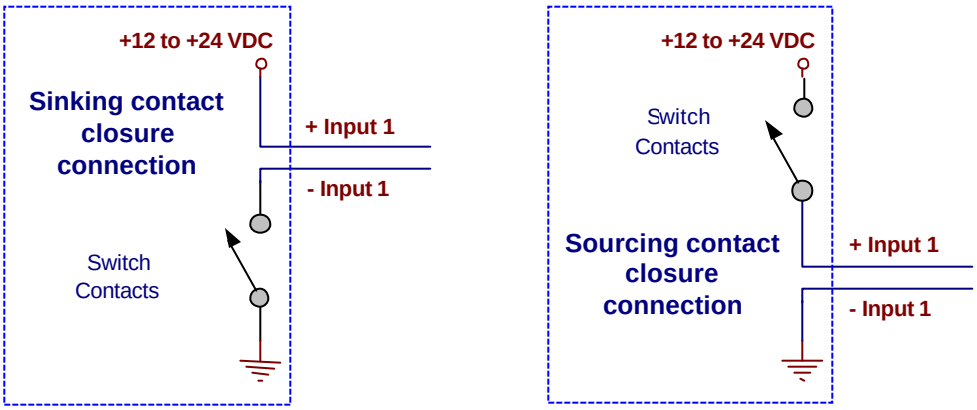

Connecting A Sensor With An Open Collector NPN Or PNP Output To Input #1

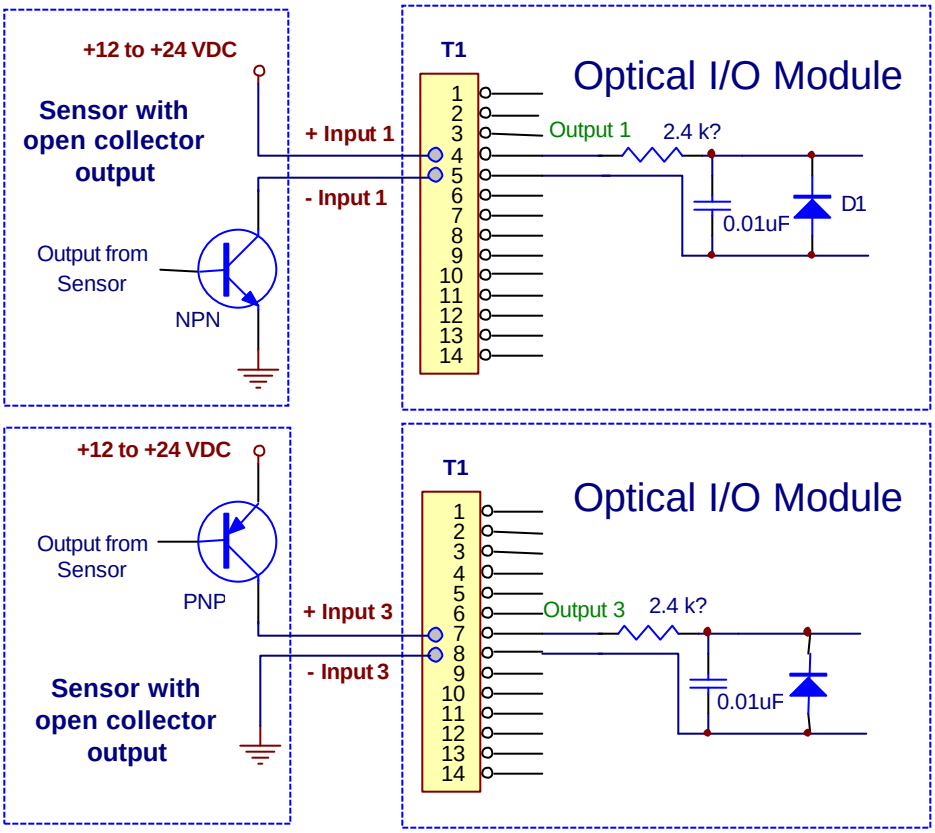

Output Signals

All optically isolated outputs are capable of sinking up to 1 A. All 7 combined are fused at 5 A. The 12-24 VDC line serves as the reference for the outputs. The OPTM inverts the SilverLode internal logic. A logic high (the default state) will open the output circuit, preventing current flow. A logic low will close the circuit and allow the output to conduct current.

Basic Output Wiring Example
Connections for operating a solenoid valve. Protection diodes must should be used.

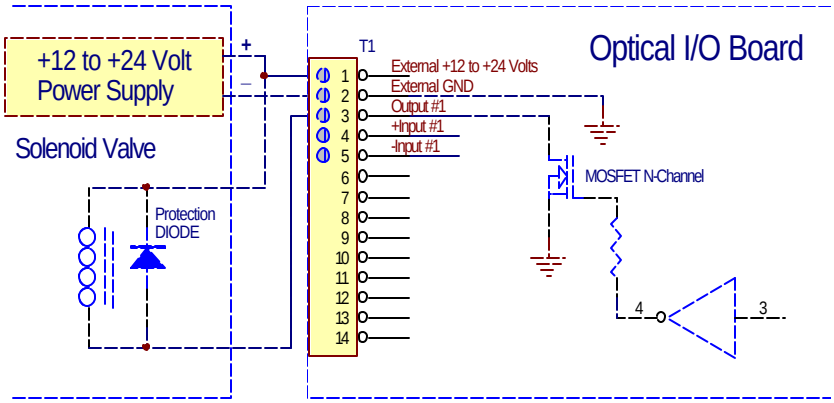

Converting From Sinking To Sourcing Output
To convert a sinking output to a sourcing output, place a pull-up resistor between the output terminal and the supply voltage. Calculate the resistance from the following equation. The sourcing output signal will follow the I/O directly. A logic high within the SilverLode will provide sourcing 24 V at the output, while a logic low will provide 0 V, relative to the power supply ground.

$$R = [(V_1 - V_{min})/(I_{min})][0.70]$$

R = pull-up resistance
V_1 = terminal 1 voltage on the I/O module (12 to 24)
V_{min} = minimum output voltage required
I_{min} = minimum output current required

NOTE: The 0.70 multiplication factor provides a safety margin when finding the nearest standard resistor.

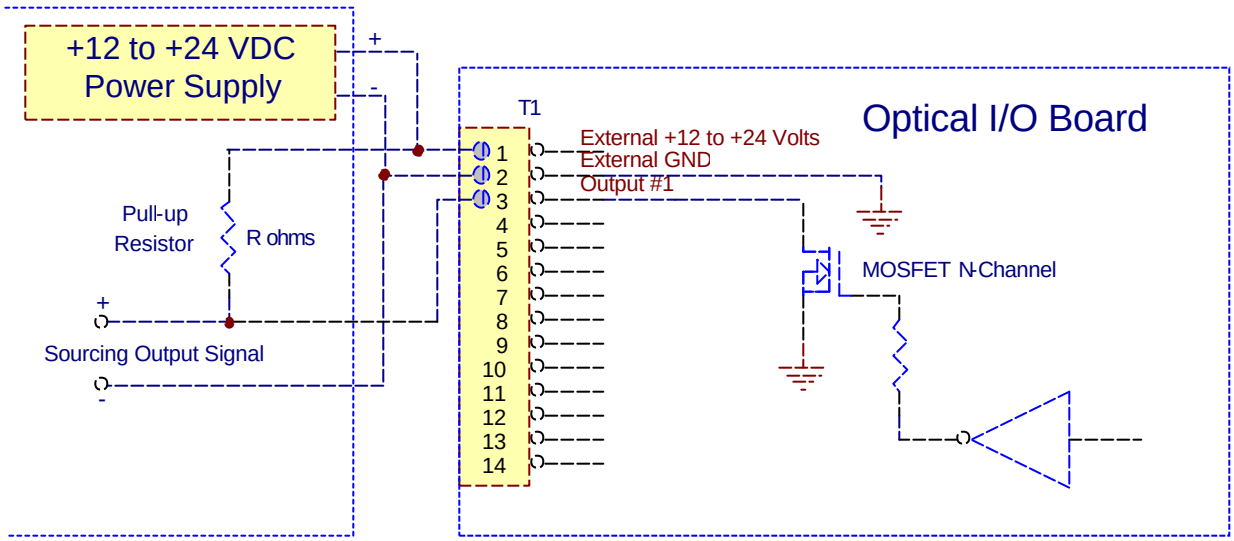

Using the Analog and TTL Connections

A separate connector is available on the board to allow direct connection of signals to the SilverLode. A set of seven jumpers, JP1 to JP7, is used to break the connection from the SilverLode to the optical couplers. The jumper(s) are removed in order to break each connection.

NOTE: When using the direct I/O no isolation is provided on the given I/O line

Power Connections

A terminal block is provided for connecting power and communications to the SilverLode. The power is fused to both the 15 Pin high-density connector and a terminal (Fused power).

Communication Connections

Communications can be either RS-232 or RS-485. Serial communication connections are available through either the labeled screw terminals or the RJ-11 connection. The RJ-11 pin out is listed on the specifications page of this document.

SMI Port

The SilverLode Multifunction Interface (SMI) Port is the 15-Pin HD D-Sub connector (DB15HD). A DB15HD Interface Cable (SMI) connects the SilverLode controller's SMI port to the modules SMI port.

Optional RS-485 Termination Jumpers

When using the SilverLode on an RS-485 network, the last device (on the end of the network) should be terminated with the proper resistance. By adding a solder bridge to each of the solder jumpers J9, J10 and J11, proper network termination will be established.

Optical I/O Module Diagram (OPTM)

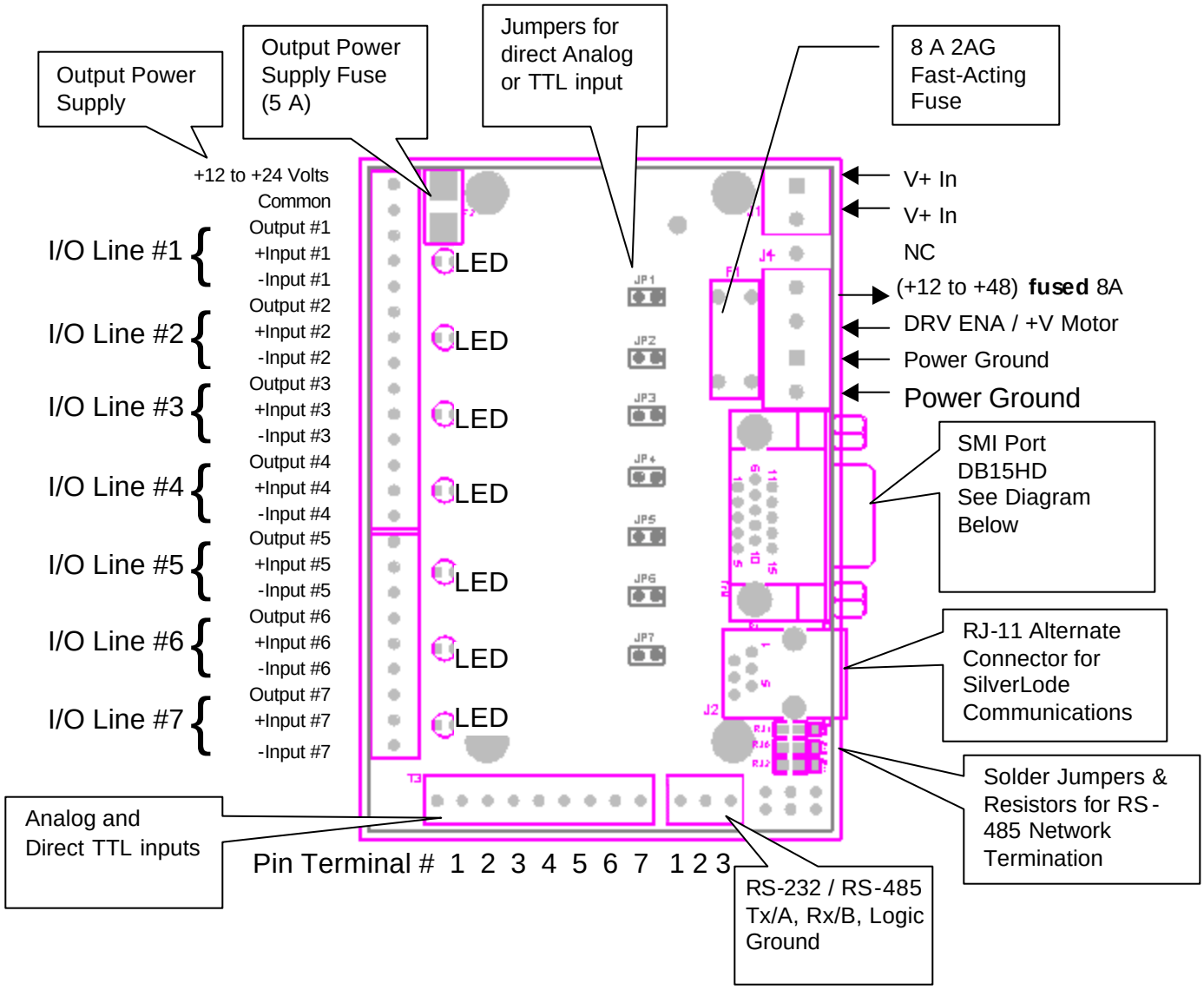

Analog and Direct TTL inputs

Pin Terminal #	Description
1	I/O #1 (TTL)
2	I/O #2 (TTL)
3	I/O #3 (TTL)
4	I/O #4 (TTL) or Analog #1
5	I/O #5 (TTL) or Analog #2
6	I/O #6 (TTL) or Analog #3
7	I/O #7 (TTL) or Analog #4

15 Pin HD D-Sub Connector

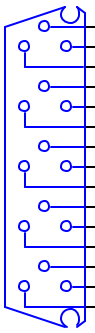

Pin #	Signal
6	Power Ground
1	Motor Power (+12 to +48)
11	Power Ground
7	Motor Power (+12 to +48)
2	RS-485 A / RS-232 Tx
12	RS-485 B / RS-232 Rx
8	Logic Ground
3	+5 Volts @ 100mA
13	I/O #1
9	I/O #2
4	I/O #3
14	I/O #4
10	I/O #5
5	I/O #6
15	I/O #7

RS-232 / RS-485 Connection

Pin Terminal #

1 Tx A
2 Rx B
3 L-GND

RJ 11 Connector

Logic/Comm GND	1
232-RxD / 485 –B	2
232-TxD / 485 –A	3
NC	4
NC	5
+5 VDC 100mA out	6

How to Use

Typical OPTM with SilverNugget N3

The SMI port on the SilverNugget N3 does not have pins 1 & 7 tied together. Pin 1 is driver enable power while pin 7 is processor power. +10 to 48 VDC must be present at pin 1 for the servo's drive circuitry to work. The OPTM terminal V+ is mapped to Pin 7 and ENA / V+ to Pin 1.

QCI ships the OPTM with a jumper wire from Fused to ENA / V+. This configuration ties processor and driver enable to the same power supply as depicted in the diagram.

Different power supply can be wired for processor and driver enable if desire. When using an alternative supply, ensure that the supply's DC common ground is connected to the SilverLode DC common ground.

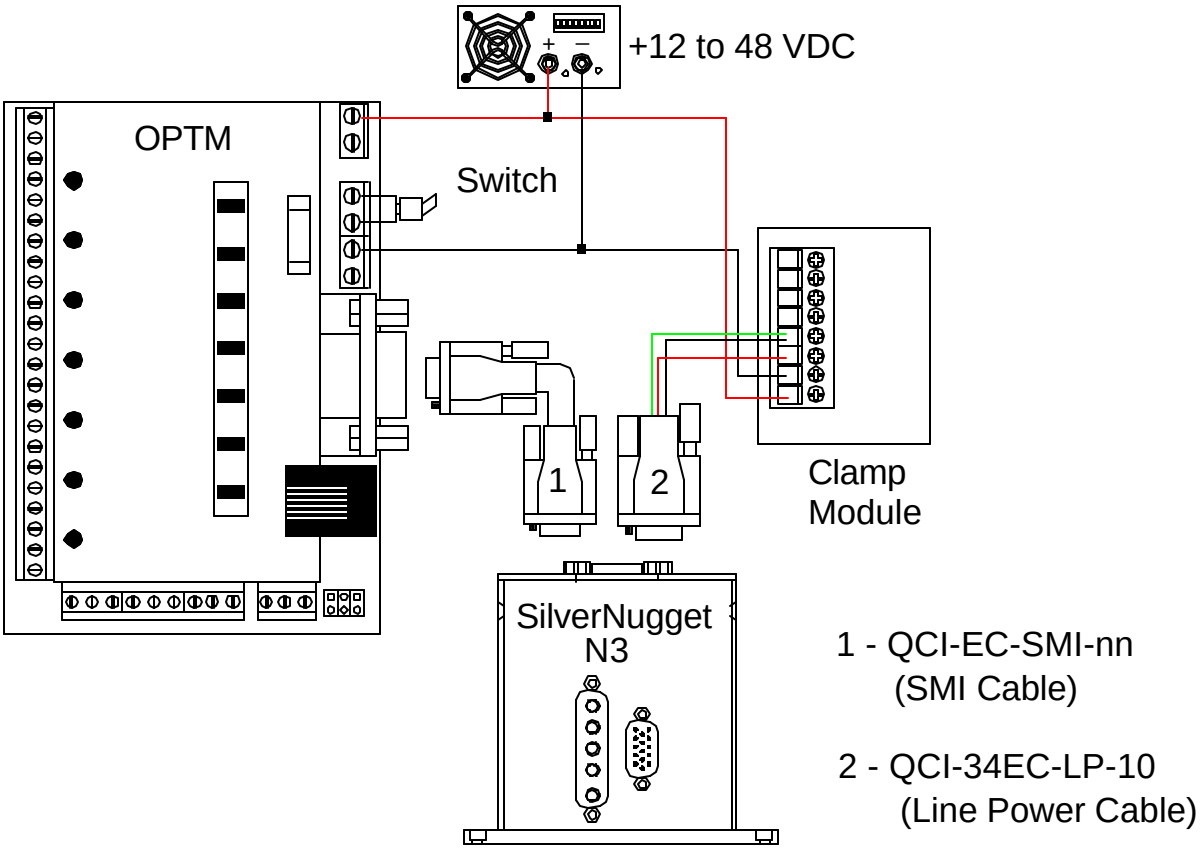

.

Typical OPTM with SilverDust D2 (IGB)

The SMI Port on the SilverDust D2 (IGB) has pins 1 & 7 tied together. Do not configure as the SilverNugget N3. Power apply to pin 1 or 7 will power the SilverDust IGB, but the servo's driver circuitry is not active unless terminal DRV / ENA on the IGB is powered with +10 to 48 VDC.

QCI ships the SilverDust IGB with a jumper wire between Clamp + and DRV / ENA. This configuration ties DRV / ENA to Clamp +, which is approximately at the power supply level from pins 1 & 7 as depicted in the diagram.

Do not apply different potential power supply to V+ and pins 1 & 7. Higher potential PS at pins 1 & 7 will back drive the lower potential PS at V+ causing damages.

Never apply power to the IGB terminal Clamp +. Power applied will trip the clamping circuit as regenerative power and over load the power resistor and eventually damaging the clamping circuit.
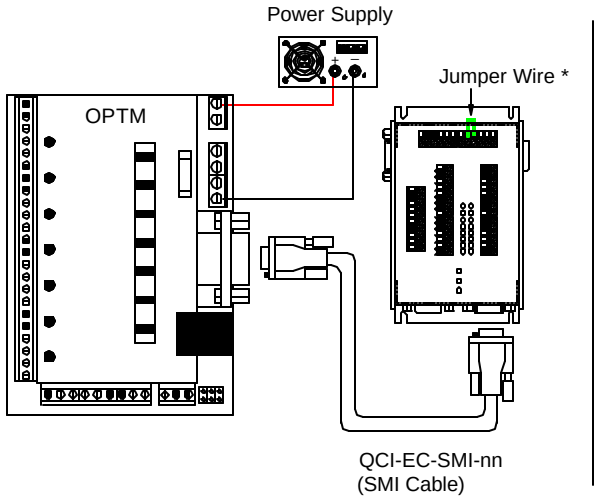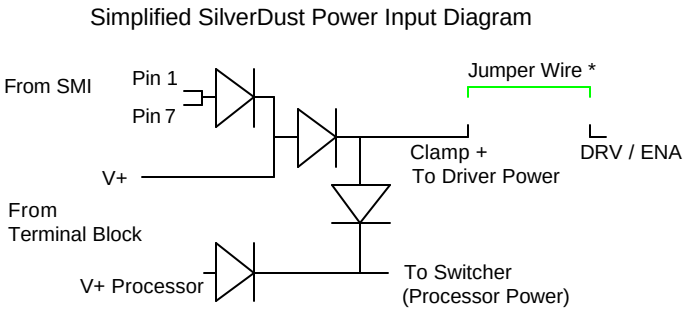
When using an alternative supply, ensure that the supply's DC common ground is connected to the SilverLode DC common ground.