NEMA 24 I-Grade Motor/Encoder

The 24 frame motor has a slightly larger cross section and a heavier shaft, but has the same mounting holes and pilot diameter as a NEMA 23 motor, for easy mounting. The 24 frame motor is designed to have a significant torque advantage over standard 23 frame motors due to the added rotor radius available.

QuickControl® and QCI® are Registered Trademarks of QuickSilver Controls, Inc.
SilverLode™, SilverNugget™, SilverDust™, PVIA™, QuickSilver Controls™, and AntiHunt™ are trademarks of QuickSilver Controls, Inc..

Note: Motor specifications (including torque curves) are only true when the motors are used in conjunction with QuickSilver's SilverLode™ Controller/Drivers (i.e. SilverNugget™, SilverDust™ and SilverSterling™). See the controller datasheets for more details.

General Motor Specifications

Specifications	24P-6
Maximum Speed (RPM)	1500
48v Optimal Speed (RPM)	600
Torque (oz-in / Nm) at Optimal Speed	223 0.22
Continuous Stall Torque oz-in / Nm	330 2.33
Peak Power (Mech. Watts)	100
Rotor Inertia oz-in^2 / Kg-m^2	4.6 8.4E-5
Weight pounds / Kg	3.1 1.4
Maximum Driver Input Current (Amps - DC)	3.5
Shaft Diameter in / mm	0.315 / 8
Maximum Axial Force (lbs)	4.5
Maximum Radial Force(lbs) 0.55'' from mounting face	16
Maximum Axial Force (lbs)	4.5

Torque Curves

Torque curves represent motor torque at the specified voltage when the TQL command is set to "100%". These curves represent torque up to 100% duty cycle depending on ambient temperature, heat sinking and air flow.

"Optimal Speed" point provides the maximum available power at "100%" torque setting, which is usually the maximum efficiency point as well. If these two points differ, the "Optimal speed" is approximately the average of the two speeds.

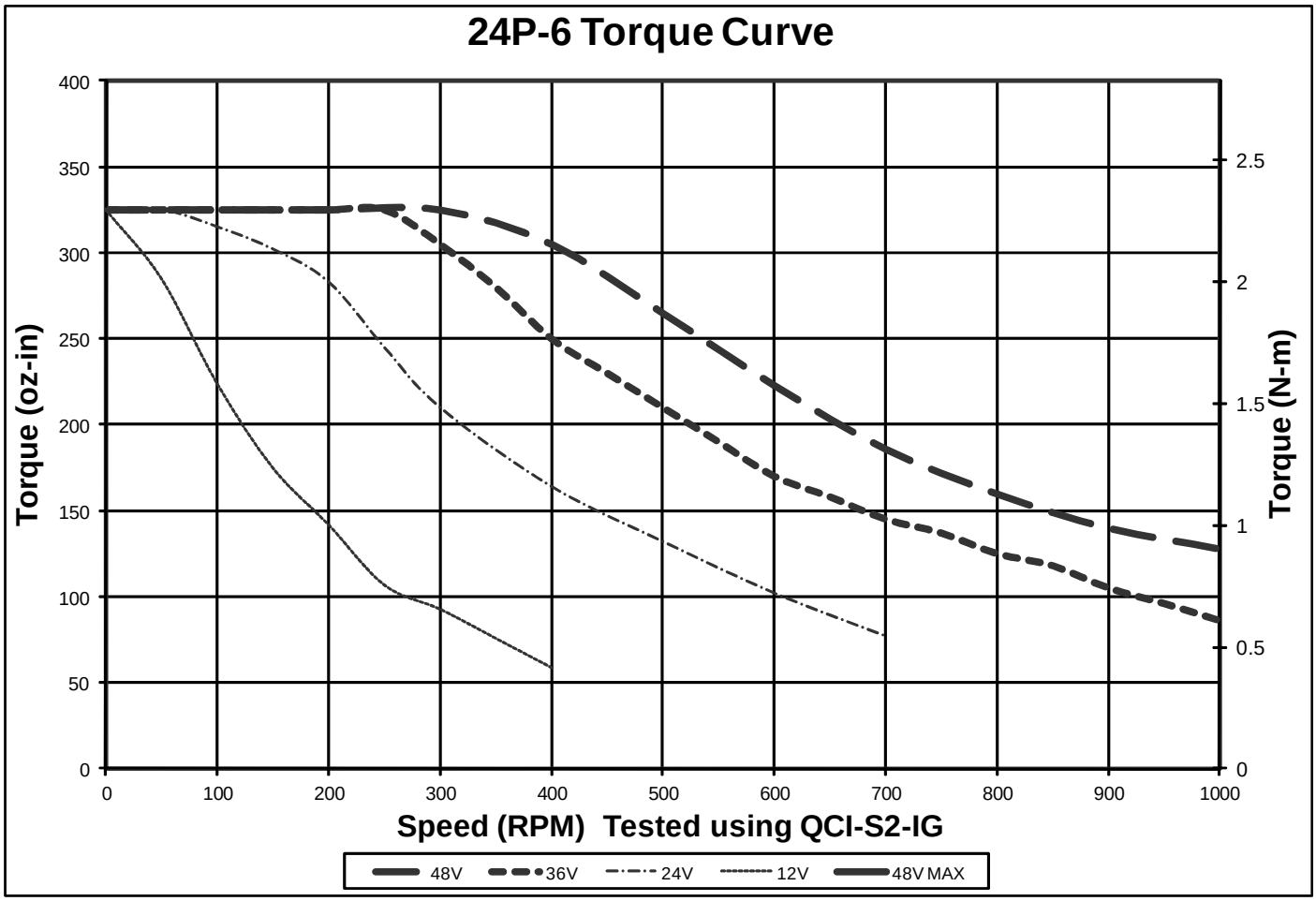

Electrical Specifications

Encoder Interface

Encoder Count Per Revolution: 8000
Index Pulse: 49 - SilverLode controller/drivers internally translate to a single index pulse.

Motor Memory

I-Grade motors come from the factory with a memory chip containing encoder and motor information. This information is automatically uploaded by the SilverDust D2's and SilverSterling S2's controller/drivers to simplify the initialization process.

Connector Data

Standard

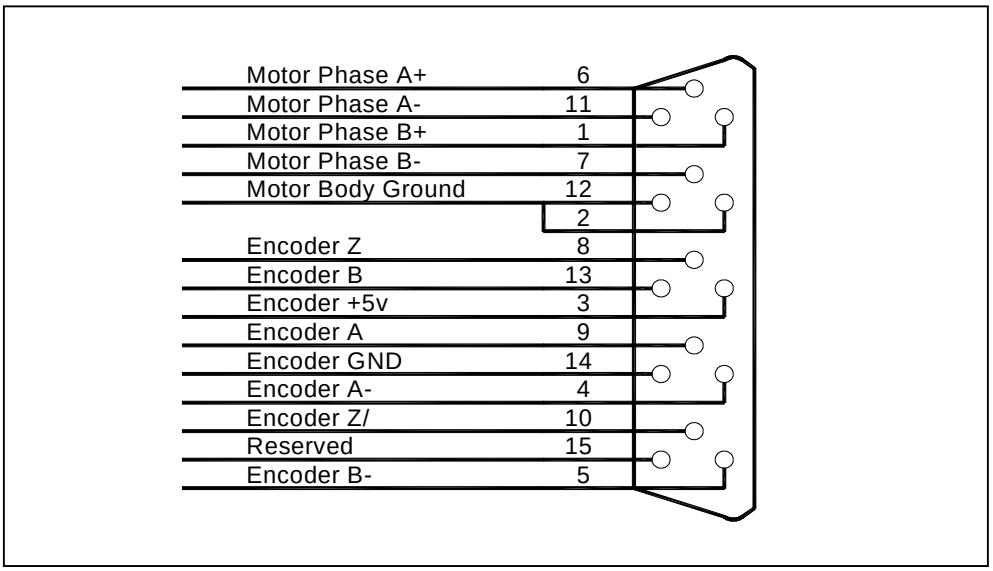

⚠Note: The motor construction uses a wave spring to compensate for mechanical tolerances and thermal expansion in the axial shaft direction. It is important to not push the shaft into the motor in operation or when mounting gears or pulleys as this may damage the encoder disk.

Mechanical Specifications

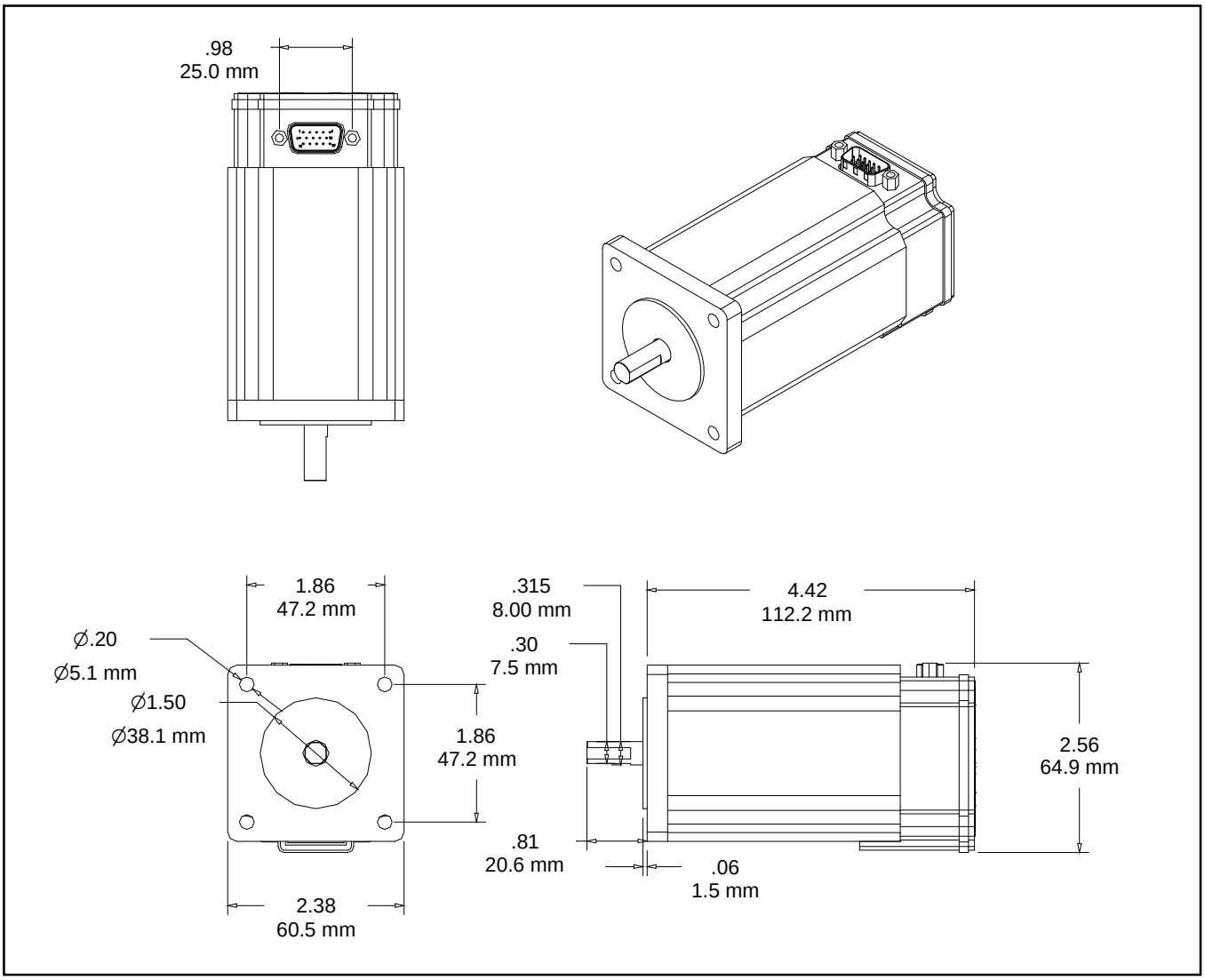

Motor Series	Length	Shaft diameter	Notes **
24P-6	4.42 [112 mm]	0.315 [8 mm]	Shaft has two .020 [.5 mm] flats

Environmental Specifications

Operational Temperature
-10 C to +80 C

Storage Temperature
-40 C to +85 C

Humidity
Continuous specification is 95% RH non-condensing.

Shock
Limitation is approximately 50g/11ms.

IP Rating - Standard
IP50

Part Numbers

NEMA 23 I-Grade Motors/Encoders	
MOTOR TYPE/SIZE	**MOTOR INTERFACE**
• **A24P-6**	**Blank** – Standard • DB15HD Motor Interface Connector
To create a part number, choose one from each column above. For example: 24P-6	
QCI-A24P-6	
This selection creates the part number: **QCI-A24P-6**	

Contact Information

QuickSilver Controls, Inc.
712 Arrow Grand Circle
Covina, CA 91722
(626) 384-4760 or (888) 660-3801
(626) 384-4761 FAX
www.QuickSilverControls.com