NEMA 17 I-Grade Motor/Encoder

QCI-A17H-3

Motor Interface Cable
QCI-C-D15P-T14S-nn
(nn = length)
sold separately

Shaft Seal (QCI-17M-65)
sold separately

QCI-A17-1-6T

® QuickControl® and QCI® are Registered Trademarks of QuickSilver Controls, Inc.
SilverLode™, SilverNugget™, SilverDust™, PVIA™, QuickSilver Controls™, and AntiHunt™ are trademarks of QuickSilver Controls, Inc..

Note: Motor specifications (including torque curves) are only true when the motors are used in conjunction with QuickSilver's SilverLode™ Controller/Drivers (i.e. SilverNugget™ and SilverDust™). See controller datasheets for more information.

General Motor Specifications

Specifications	17-1	17H-3	17K-1	17-3	17H-1
Maximum Speed (RPM)	2500	4000	2500	2500	4000
Optimal Speed (RPM) (best power and efficiency)	1600	2700	900	1600	2700
Torque at Optimal Speed oz-in / Nm	12 0.08	30 0.21	35 0.25	19 0.13	16 0.11
Continuous Stall Torque oz-in / Nm	21 0.15	43 0.30	42 0.30	36 0.25	23 0.16
Peak Power (Mech. Watts)	16	69	25	24	34
Rotor Inertia oz-in^2 / Kg-m^2	0.19 3.5E-6	0.37 6.8E-6	0.17 3.3E-6	0.37 6.8E-6	0.19 3.5E-6
Weight pounds / Kg	0.60 0.27	0.90 0.40	0.60 0.27	0.90 0.40	0.60 0.27
Maximum Current (amps) (drawn from power supply)	1.3	4.0	2.3	1.5	3.0
Maximum Radial Force (lbs)	5	5	5	5	5
Maximum Axial Force (lbs)	3	3	3	3	3

Note: The grayed items are special order only and should not be used for new designs; their information is provided for existing installations.

Torque Curves

48V Max is the torque of the motor when the Torque Limits (TQL) command is set to "Max" (see SilverLode Command Reference for details on the TQL command). Operating the motor in this mode requires proper heat sinking on the Controller/Driver and motor to prevent overheating.

All other torque curves represent motor torque at the specified voltage when the TQL command is set to "100%". These curves represent torque up to 100% duty cycle depending on ambient temperature, heat sinking and air flow.

Important: There is a slight reduction in torque if the shaft seal (sold separately) is used due to the resistance of the quad seal around the shaft.

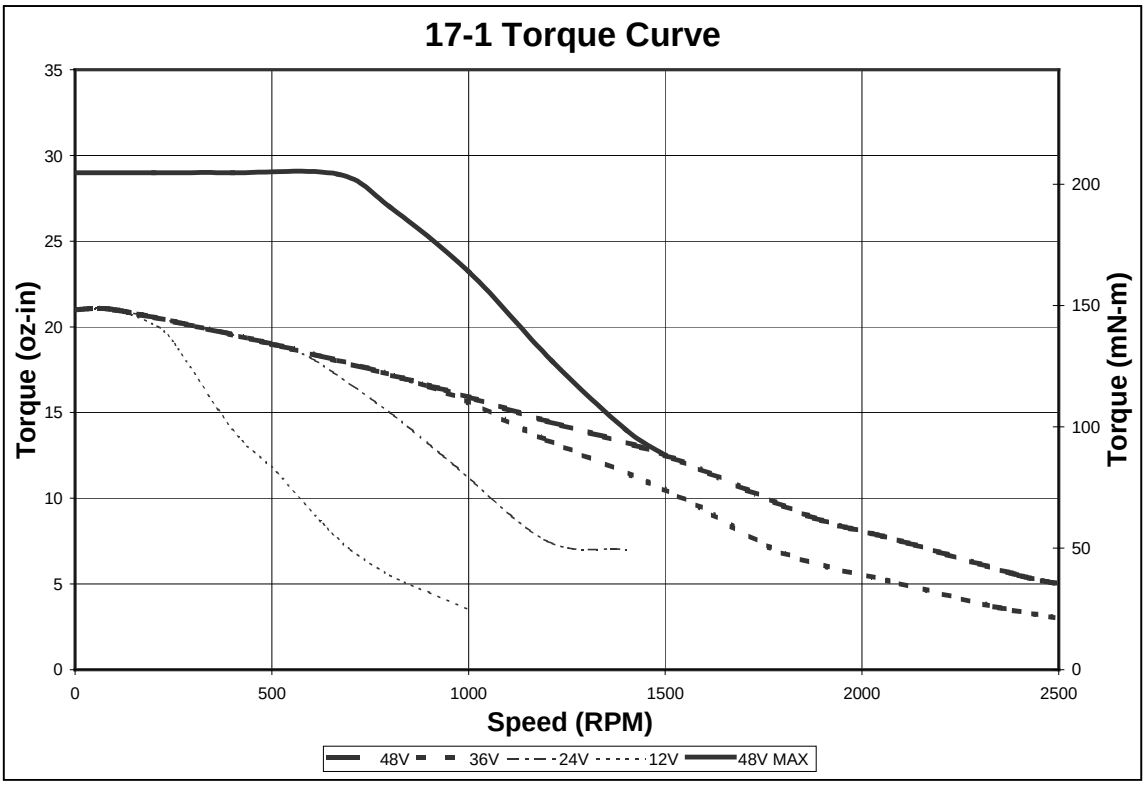
17-1 Torque Curve
Torque (oz-in)
Torque (mN-m)
Speed (RPM)
0
5
10
15
20
25
30
35
0
50
100
150
200
0
500
1000
1500
2000
2500
48V
36V
24V
12V
48V MAX

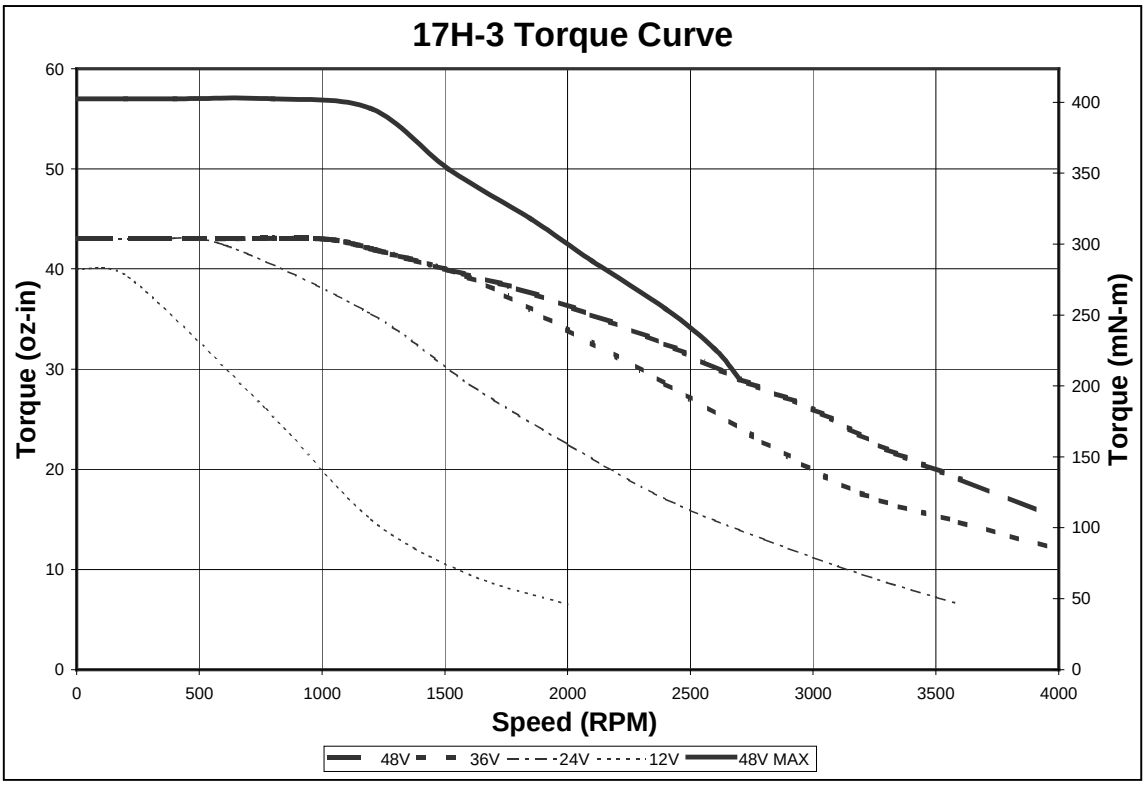
17H-3 Torque Curve
Torque (oz-in)
Torque (mN-m)
Speed (RPM)
0
10
20
30
40
50
60
0
50
100
150
200
250
300
350
400
0
500
1000
1500
2000
2500
3000
3500
4000
48V
36V
24V
12V
48V MAX

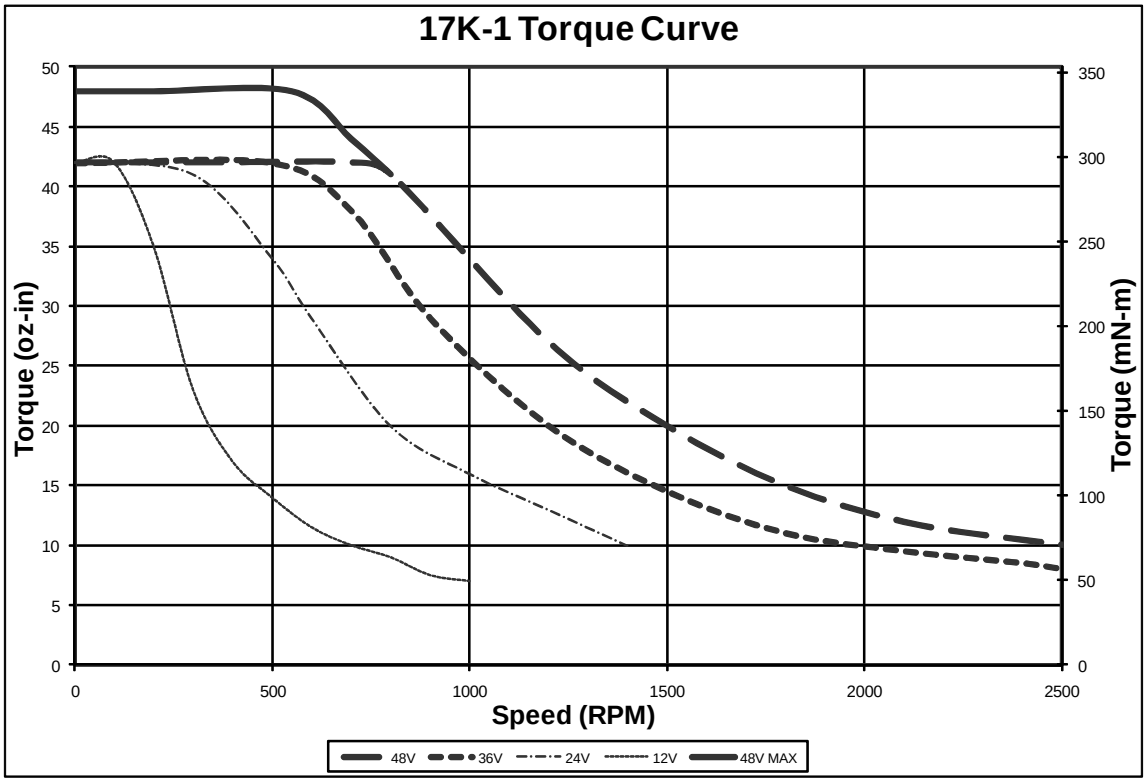
17K-1 Torque Curve
Torque (oz-in)
Torque (mN-m)
Speed (RPM)
0
5
10
15
20
25
30
35
40
45
50
0
50
100
150
200
250
300
350
0
500
1000
1500
2000
2500
48V
36V
24V
12V
48V MAX

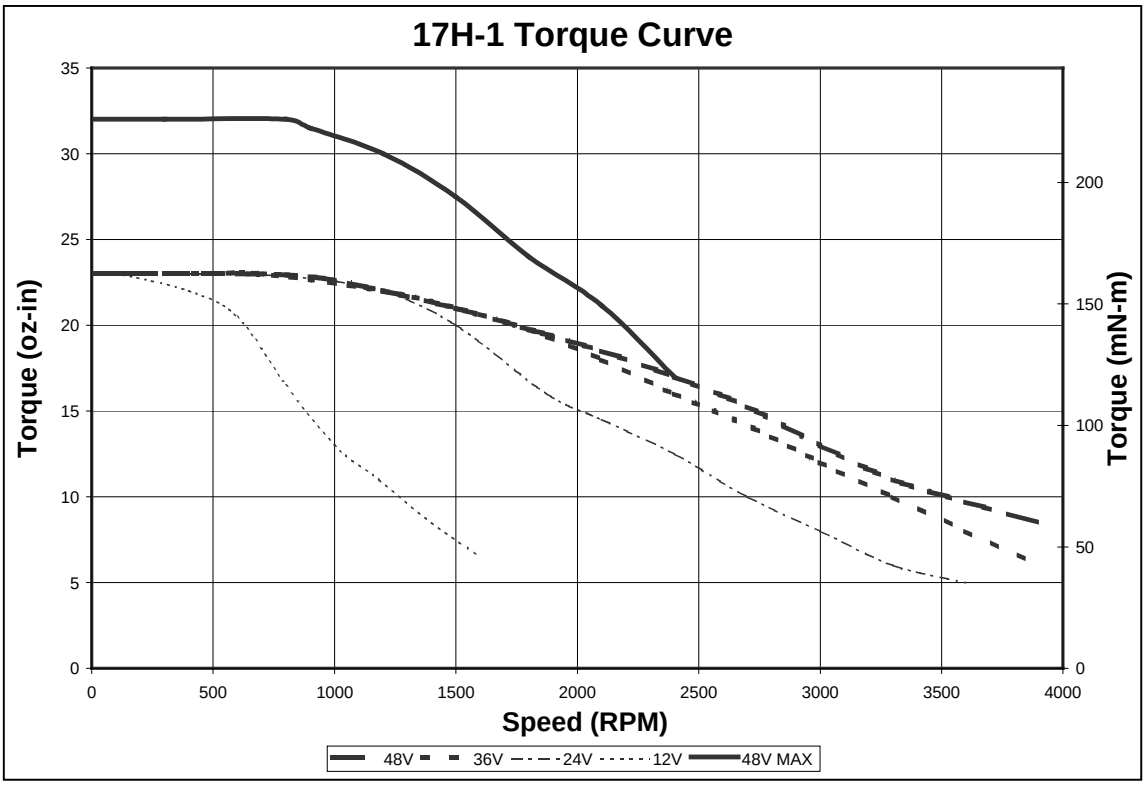
17H-1 Torque Curve
Torque (oz-in)
Torque (mN-m)
Speed (RPM)
0
5
10
15
20
25
30
35
0
50
100
150
200
0
500
1000
1500
2000
2500
3000
3500
4000
48V
36V
24V
12V
48V MAX

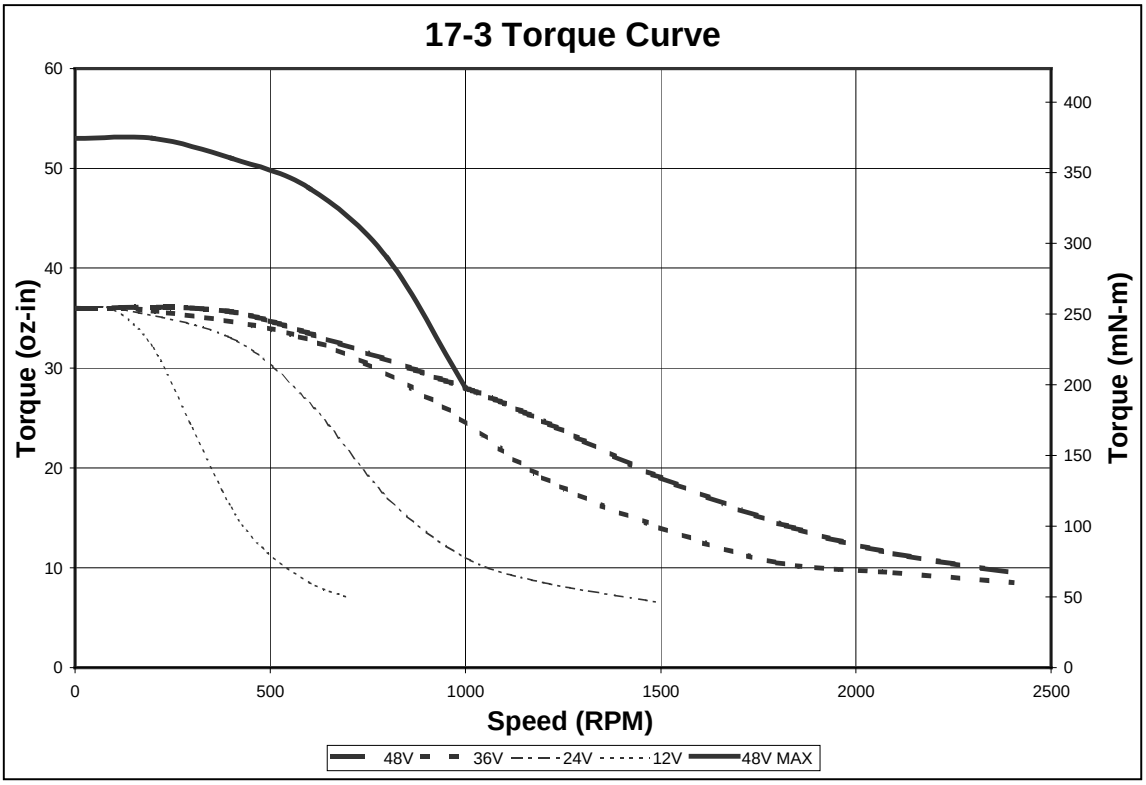

Electrical Specifications

Encoder Interface

Encoder Counts Per Revolution: 8000
Index Pulse: 49 - SilverLode controller/drivers internally translate to a single index pulse.

Motor Memory

I-Grade motors come from the factory with a memory chip containing encoder and motor information. This information is automatically uploaded by the SilverDust IG/IGB controller/driver to simplify the initialization process.

Temperature Sensor (-6T Option Only)

All QCI IP65 motors contain a sensor to read motor temperature. This sensor automatically reads in the background when controlled by a SilverDust I-Grade controller/driver. Temperature can be read from a dedicated register and/or used to halt the servo in the case of an over temperature condition.

Index Alignment

The Index alignment is marked on the shaft and mounting face with a black line. Aligning the line on the shaft with the line on the mounting face will position the shaft approximately at the once per revolution index position for mechanical assembly.

Connector Data

Standard

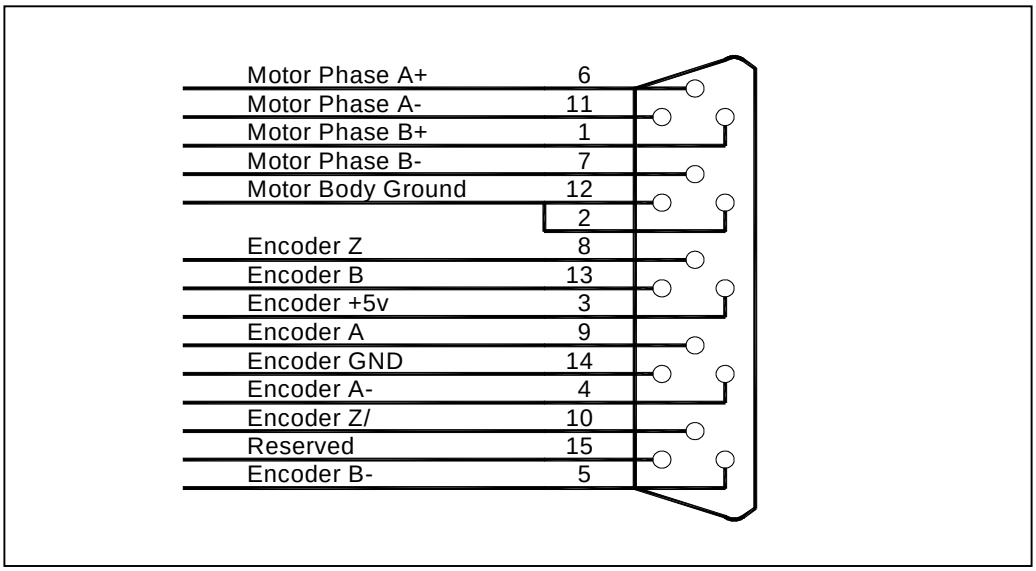

-6T Option

Pin	Signals
A	Motor A -
C	+5V
E	Memory
G	Motor B+
J	Motor B -
L	Motor A+
M	Z+
N	Z -
O	A+
P	B -
R	B+
S	GND
T	A-
U	Motor GND

EXPOSED FRONT VIEW OF MOTOR CONNECTOR

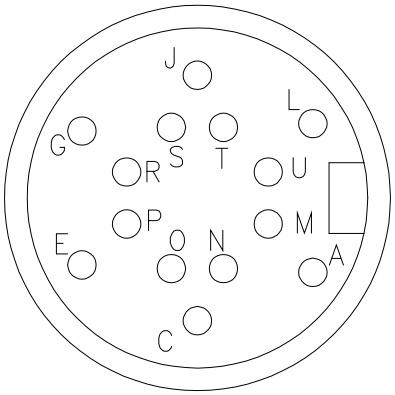

Mechanical Specifications

Standard

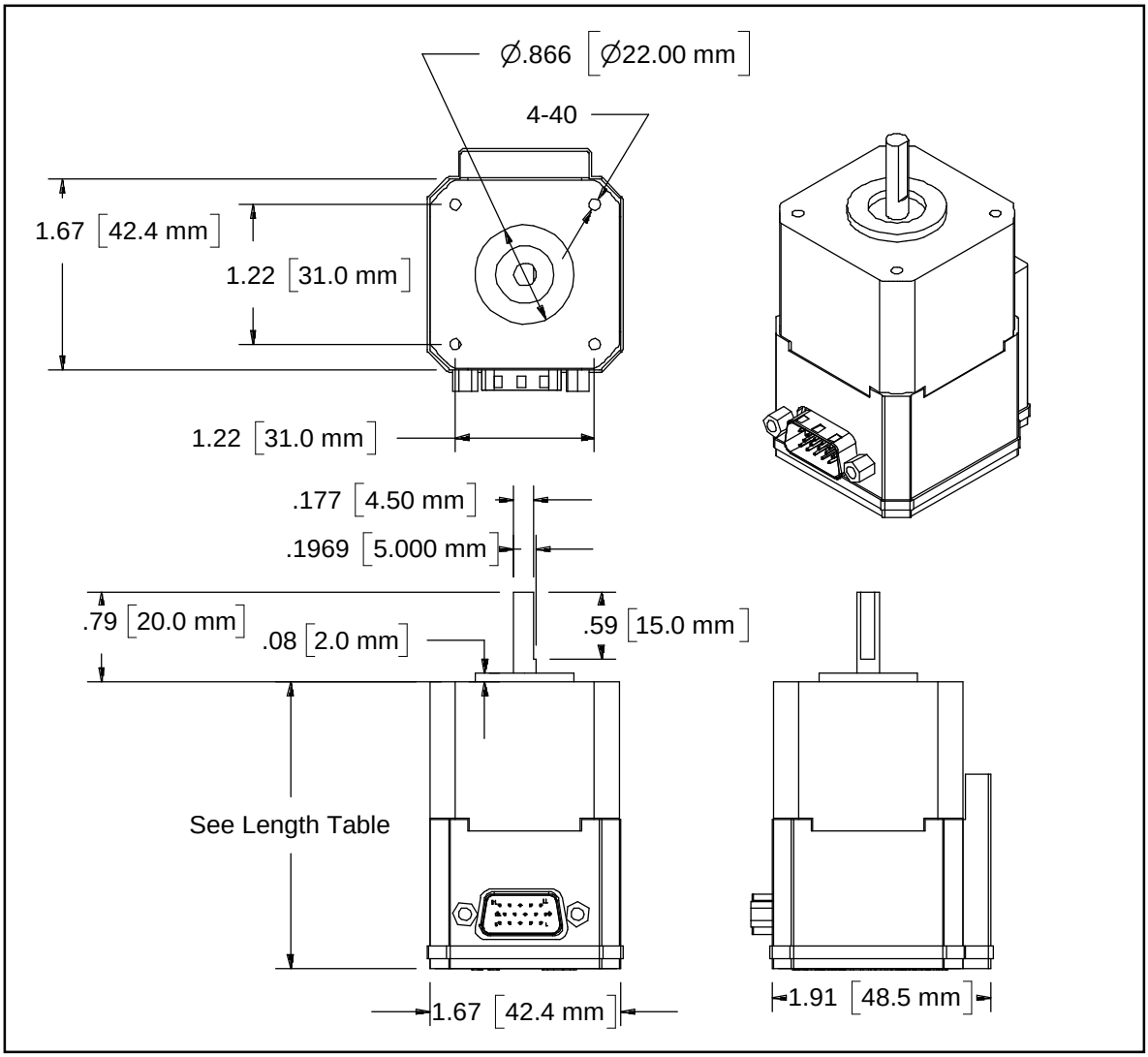

Part Number	Length
QCI-A17-1	2.6 [66 mm]
QCI-A17H-1	2.6 [66 mm]
QCI-A17K-1	2.6 [66 mm]
QCI-A17-3	3.1 [78 mm]
QCI-A17H-3	3.1 [78 mm]

Note: See our website for 2D drawings and 3D models.

-6T Option

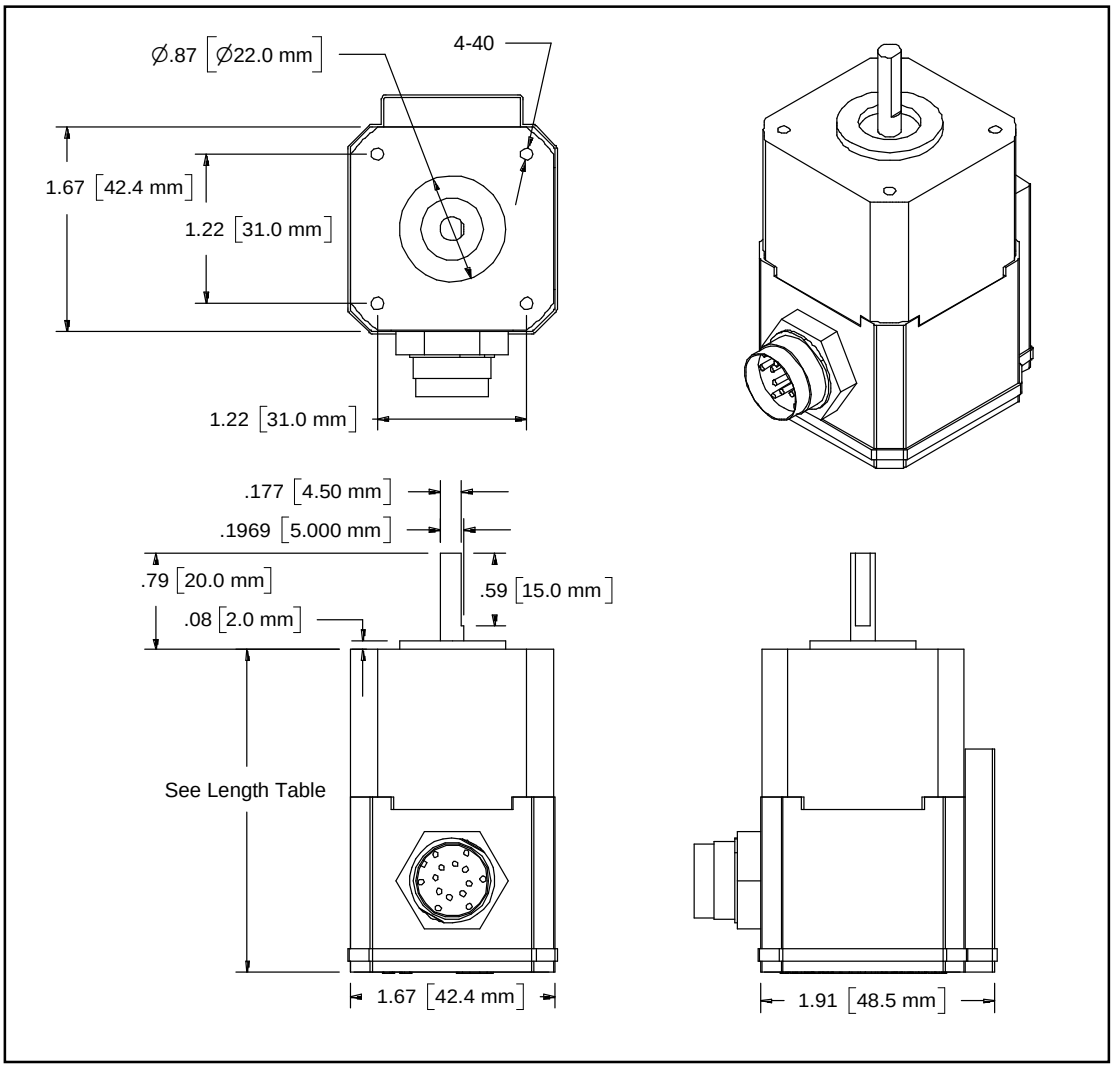

Part Number	Length
QCI-A17-1-6T	2.7 [69 mm]
QCI-A17H-1-6T	2.7 [69 mm]
QCI-A17K-1-6T	2.7 [69 mm]
QCI-A17-3-6T	3.2 [81 mm]
QCI-A17H-3-6T	3.2 [81 mm]

Note: See our website for 2D drawings and 3D models.

⚠Note: The motor construction uses a wave spring to compensate for mechanical tolerances and thermal expansion in the axial shaft direction. It is important to not push the shaft into the motor in operation or when mounting gears or pulleys as this may damage the encoder disk.

Environmental Specifications

Operational Temperature
-10 C to +80 C

Storage Temperature
- 40 C to +85 C

Humidity
Continuous specification is 95% RH non-condensing.

Shock
Limitation is approximately 50g/11ms.

IP Rating - Standard
IP50

IP Rating (-6T Option)
IP65 is achieved if both a shaft seal and IP65 Motor Interface Cable (QCI-C-D15P-T14S-nn) are used.

NOTE: The IP65 rating is for applications with occasional wash downs. It is not meant for continuous wet applications or high-pressure wash downs. See IP65 spec for more details (CEI IEC 529).

Recommended Components

Start-Up Kit
There are several start-up kits available, each based off a servo controller/driver. With a Start-Up kit, power supply and motor/encoder, you will have everything you need to get started. See the Start-Up Kit technical documents on our website for more details.

If you would rather buy the components individually, QCI recommends the following:

SilverNugget N2 Controller/Driver (QCI-N2-E3-04-EE) or
SilverDust D2 IG/IGB/IG8/IGF/IGC Controller/Drivers
(i.e. QCI-D2-IG, QCI-D2-IGB, QCI-D2-IG8,QCI-D2-IGF)
The motors will work with any of the following controller/drivers. See the indicated datasheets for details:

SilverDust D2 IGB (QCI-DS003)
SilverNugget I-Grade N2 (QCI-DS005)
SilverDust D2 IG8 (QCI-DS018)
SilverDust D2 IG (QCI-DS019)
SilverDust D2 IGF (QCI-DS021)
SilverDust D2 IGC (QCI-DS016)

Shaft Seal (QCI-17M-65) (-6T Option Only)
The shaft seal (sold separately) is required for an IP65 rating (–6T option) on the shaft end of the motor. The shaft seal consists of an o-ring seal for the motor's pilot and a quad ring seal for the shaft. The shaft seal needs periodical inspections, lubrication, and replacement if worn out.

SilverLode Manuals (QCI-SLM) QuickControl Software (QCI-QC)
The SilverLode User Manual, SilverLode Command Reference and QuickControl Software are also available on our website. We recommend first time users reading chapter 1 of the User Manual.

Motor Interface Cable (QCI-C-D15P-D15S-nn)
This cable goes between the motor the SilverLode™ Controller/Driver (SilverDust D2 or SilverNugget N2). Replace the last two digits "nn" with length of cable in feet (i.e – 10 for 10 feet).

IP65 Motor Interface Cable (QCI-C-D15P-T14S-nn) (-6T Option Only)
This cable goes between the motor and the SilverLode™ Controller/Drive (SilverDust D2 or SilverNugget N2). Replace the last two digits "nn" with length of cable in feet (i.e. –10 for 10 feet).

Power Supply (i.e. S-210-48)
A 12-48V power supply producing the amps specified above (see General Motor Specifications) is required. QuickSilver recommends the following power supply for all 17 frame motors.

- S-210-48 (48V, 4.4A, 210W)

Part Number

NEMA 17 I-Grade Motors/Encoders	
MOTOR TYPE/SIZE	**MOTOR INTERFACE**
• **A17-1** • **A17-3** • **A17H-1** • **A17H-3** • **17k-1**	**Blank –** Standard • DB15HD Motor Interface Connector **6T** – IP65 • 14 Pin Round Connector • Shaft seal required for full IP65 rating. o QCI-17M-65 • Extra coating on motor exterior.
To create a part number, choose one from each column above. For example: Standard 17-1 with IPG65 Option	
QCI-A17-1	**6T**
This selection creates the part number: **QCI-A17-1-6T**	

Standard Stocked Items

QCI-17-1
QCI-17H-3

Special Orders

QCI-17H-1
QC1-17K-1
QCI-17-3
All 6T Options

Contact Information

QuickSilver Controls, Inc.
712 Arrow Grand Circle
Covina, CA 91722
(626) 384-4760 or (888) 660-3801
(626) 384-4761 FAX
www.QuickSilverControls.com