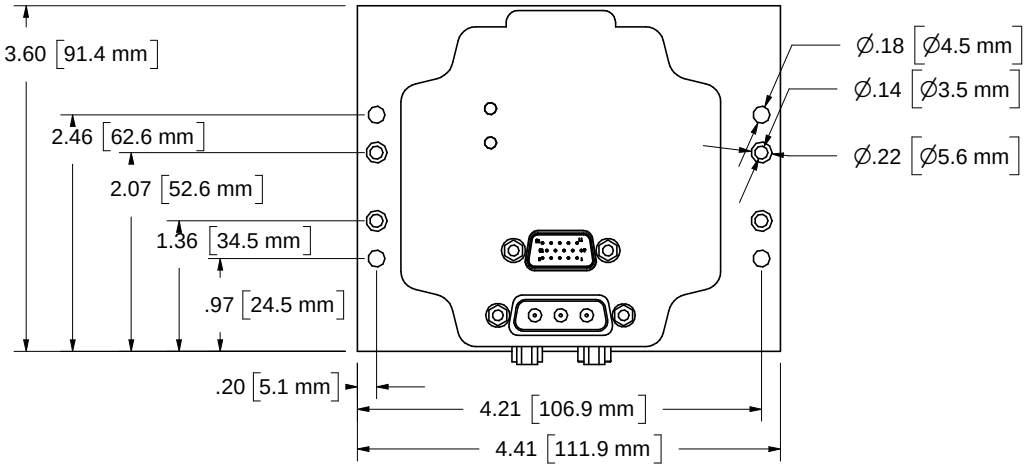
3.60 [91.4 mm]
2.46 [62.6 mm]
2.07 [52.6 mm]
1.36 [34.5 mm]
.97 [24.5 mm]
.20 [5.1 mm]
4.21 [106.9 mm]
4.41 [111.9 mm]
Ø.18 [Ø4.5 mm]
Ø.14 [Ø3.5 mm]
Ø.22 [Ø5.6 mm]

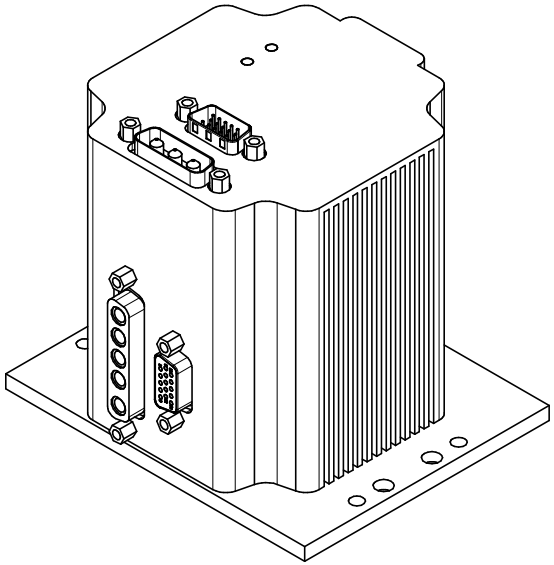

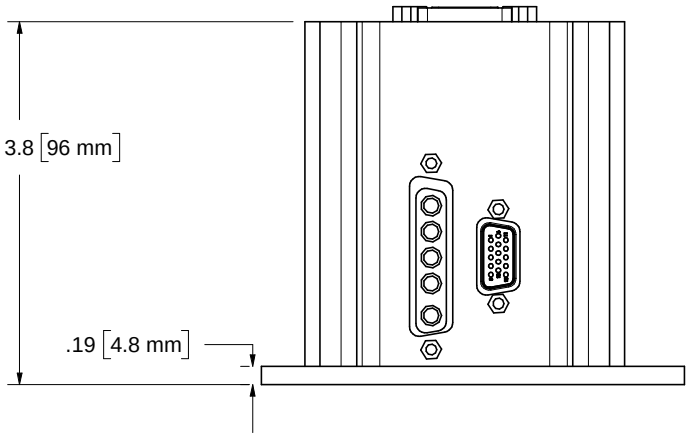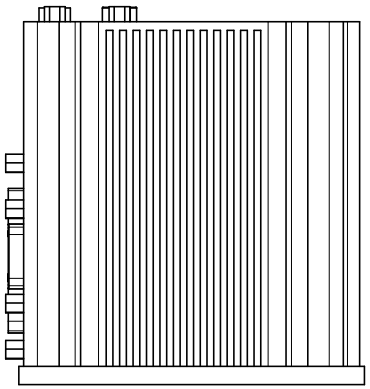
3.8 [96 mm]
.19 [4.8 mm]